ITEM NO.	PART NUMBER	DESCRIPTION	QTY.
1	C000-0044	BUMPER, RUBBER, BLK 1x1 RND	1
2	C000-0050	BRG,RL,1 BORE	1
3	C000-0054	BRG,CUP,2.24 O.D. USE W/C000-0050	1
4	C000-0057	COLLAR, CLAMP 3/8-24	1
5	C000-0066	BRG,FL,1/2 X 3/4 X 1	2
6	C000-0068	BRG,TH,3/8 X 3/4 X 1/32	2
7	C000-0069	BRG,TH,1/2 X 1 X 1/16 BOS TB-816	1
8	C000-0070	ROD END 1/4-28 LEFT HAND	1
9	C000-0071	ROD END 1/4-28 RIGHT HAND	1
10	C000-0179	WSHR,FLT,NYL,3/16 X 3/8 X 1/32	4
11	C000-0212	SCR,SOC,SHLDR,SST,1/4 X 3/4	1
12	C000-0286	BRG,TH,1/2 X 1 x 3/32	1
13	C000-0352	BRG,TH,1 3/4 X 2 3/4 X 1/16	1
14	C000-0353	BRG,PL,1 3/4 X 2 X 1 1/2	1
15	C000-0541	STNDF,HEX,#8-32x5/8x3/8	4
16	C000-0586	SPRING,GAS,1300N W/STUD,CLIP&BOOT	2
17	C000-0672	SPRING,GAS,800N W/STUD & CLIP	2
18	C000-0679	WSHR,FLT,SST,13/32x7/8x.04-.06	2
19	C000-0928	BRG,FL,7/16 X 9/16 X 3/4	2
20	C000-0972	BUMPER, URETHANE W/INSERT 1x1x5/16	1
21	C000-1346	SHAFTING,SST,1/4 X 2-1/4	1
22	C000-1347	COLLAR,INSERT,BUMPER	1
23	P240-775	ADJUSTER, 1000F (PT)	1
24	P240-777	TUBE, PIVOT (PT)	1
25	P240-781	CORE, 1000F (PT)	1
26	P240-787	CAP, PIVOT, JOINT (PT)	1
27	P240-789	CLAMP, CABLE (PT)	1
28	P240-791	SLIDER,CLAMP,CABLE, 1000F (PT)	1
29	P240-834	COVER, SUSPENSION (PT)	1
30	P240-840	HANGER,MNT,HOSE,1000F (PT)	1
31	P240-1041	ROTATIONAL STOP 1000F (PT)	1
32	P240-1085	ARM 1000F-H1 (PT)	1
33	P240-1128	LINK,30.06",1000F-H1 CORE (PT)	1
34	Q240-1082	PIN, CROSS 3/4 DIA (EN)	1
35	X240-842	BUMPER 1/2x1x2-1/2 ..BLACK NEOPRENE	1
36	Z240-841	MOUNT, BUMPER	1
37	Z240-883	ADJUSTER .38 X 5 1/4 SS	1
38	Z240-1079	SSCR,SOC,CUST,SS 3/4-16x1.50	2
39	H0002027	SCR,HEX HD,ZP,5/16-24 X 3/4 GR8	2
40	H0002028	SSCR,SOC,CUP,ALLOY,1/2-13 X 2	1
41	H0002029	NUT,CASTLE,ZP,1-14	1
42	H0000189	NUT,HEX,ZP,1/4-28	1
43	H0002030	NUT,HEX,JAM,ZP,1/2-13	1
44	H0001994	NUT,NYLOK,3/8-16	1
45	H0002031	PIN,ROLL,3/16 X 1 1/2	1
46	H0002032	SCR,PHH,TRUSS,NP,#8-32 X 3/8	4
47	H0000273	SCR,SOC,BTN,ALY,5/16-18 X 3/4	2
48	H0000355	SCR,SOC,BTN,SST,#10-32 X 3/8	1
49	H0001528	SCR,SHCS,ALY,#10-32 X 3/4	2
50	H0001592	SCR,SHCS,ALY,1/4-28 X 1	1
51	H0001533	SCR,SHCS,SST,#10-32 X 1	3
52	H0001334	SCR,SOC,FLT,ALY,1/4-28 X 3/4	2
53	H0001186	SCR,SOC,SHLDR,ALY,1/2 X 2-3/4	1
54	H0000136	WSHR,LCK,SPL,ZP,5/16	3
55	H0000146	WSHR,LCK,INT,ZP,#10	1
56	H0000123	WSHR,FLT,ZP,5/16	2
57	H0000129	WSHR,FLT,ZP,1 USS	1
58	H0001998	SSCR,SOC,CUP,ALLOY,1/4-20 X 3/8.BRS	2
59	H0001989	NUT,NYLOK,#10-32	1
60	H0001620	SCR,SHCS,ALY,5/16-18 X 1	1
61	H0002033	WSHR,FNDR,ZP,5/16 X 1-1/4	2
62	H0001992	NUT,NYLOK,5/16-18	2
63	H0000358	SCR,SOC,BTN,SST,#10-32 X 3/4	2

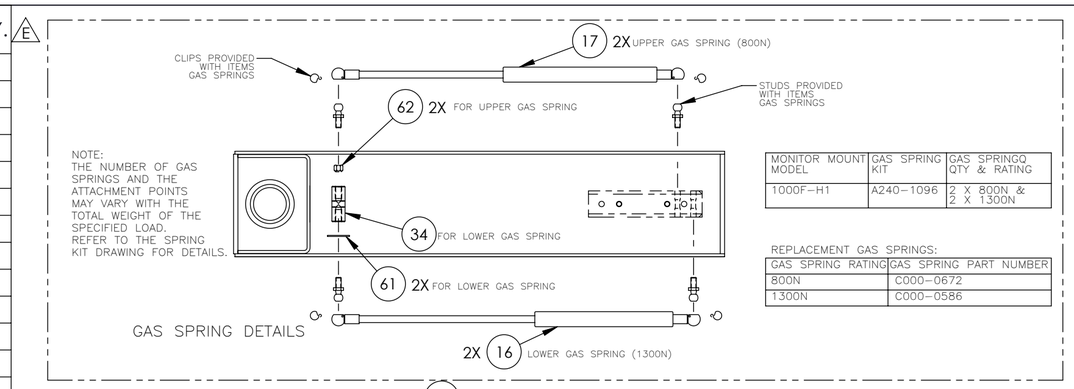

MONITOR MOUNT MODEL	GAS SPRING KIT	GAS SPRINGQ QTY & RATING
1000F-H1	A240-1096	2 X 800N & 2 X 1300N

REPLACEMENT GAS SPRINGS:

GAS SPRING RATING	GAS SPRING PART NUMBER
800N	C000-0672
1300N	C000-0586

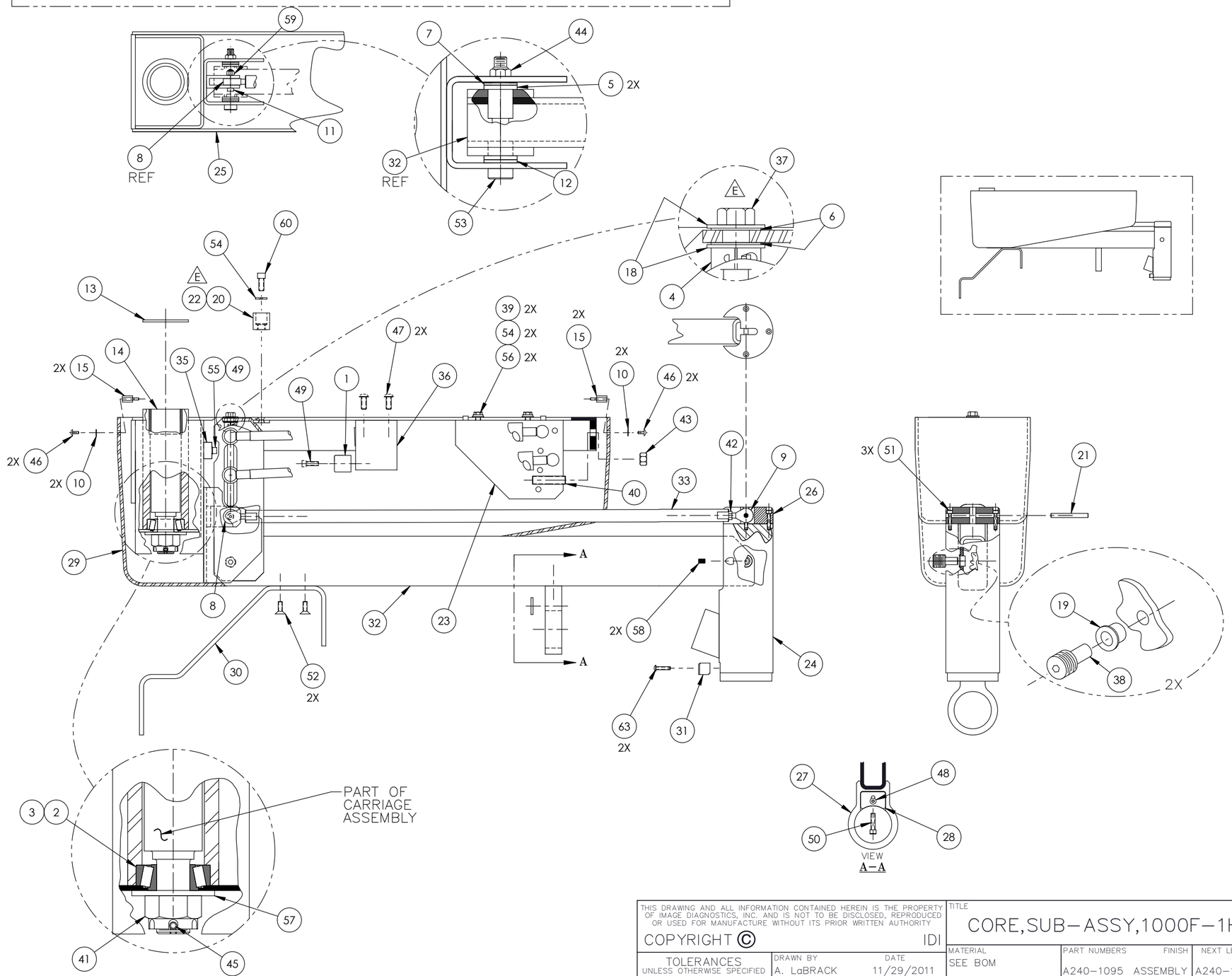

NOTES:
1. USE LOCTITE ON ALL THREADED FASTENERS.
2. FOR LOCATIONS OF LABELING, REFER TO IDI DRAWING A240-1435.

REVISIONS

REV.	ECO	DESCRIPTION	BY	DATE
A	359	UPDATED	ARL	09-18-13
B	387	UPDATED	ARL	10-29-14
C	480	UPDATED	MDL	12-11-15
D	426	ADDED KIT	MDL	2-2-2016
E	E663	ADDED BOM & CONSOLIDATED LABELS	MDL	14-JAN-2019

THIS DRAWING AND ALL INFORMATION CONTAINED HEREIN IS THE PROPERTY OF IMAGE DIAGNOSTICS, INC. AND IS NOT TO BE DISCLOSED, REPRODUCED OR USED FOR MANUFACTURE WITHOUT ITS PRIOR WRITTEN AUTHORITY
COPYRIGHT © IDI

TOLERANCES UNLESS OTHERWISE SPECIFIED
FRACTION = ± 1/32
DECIMAL .XX = ± .01
DECIMAL .XXX = ± .005
ANGULAR = ± 1°

DRAWN BY A. LaBRACK DATE 11/29/2011
APPROVED BY SEE ECO DATE

Image Diagnostics, Inc. idi
310 Authority Drive Fitchburg, MA 01420

TITLE CORE,SUB-ASSY,1000F-1H

MATERIAL	PART NUMBERS	FINISH	NEXT LEVEL
SEE BOM	A240-1095	ASSEMBLY	A240-1409

SHEET 1 OF 1 SCALE 1:2
SIZE C DWG NO. A240-1095 REV E